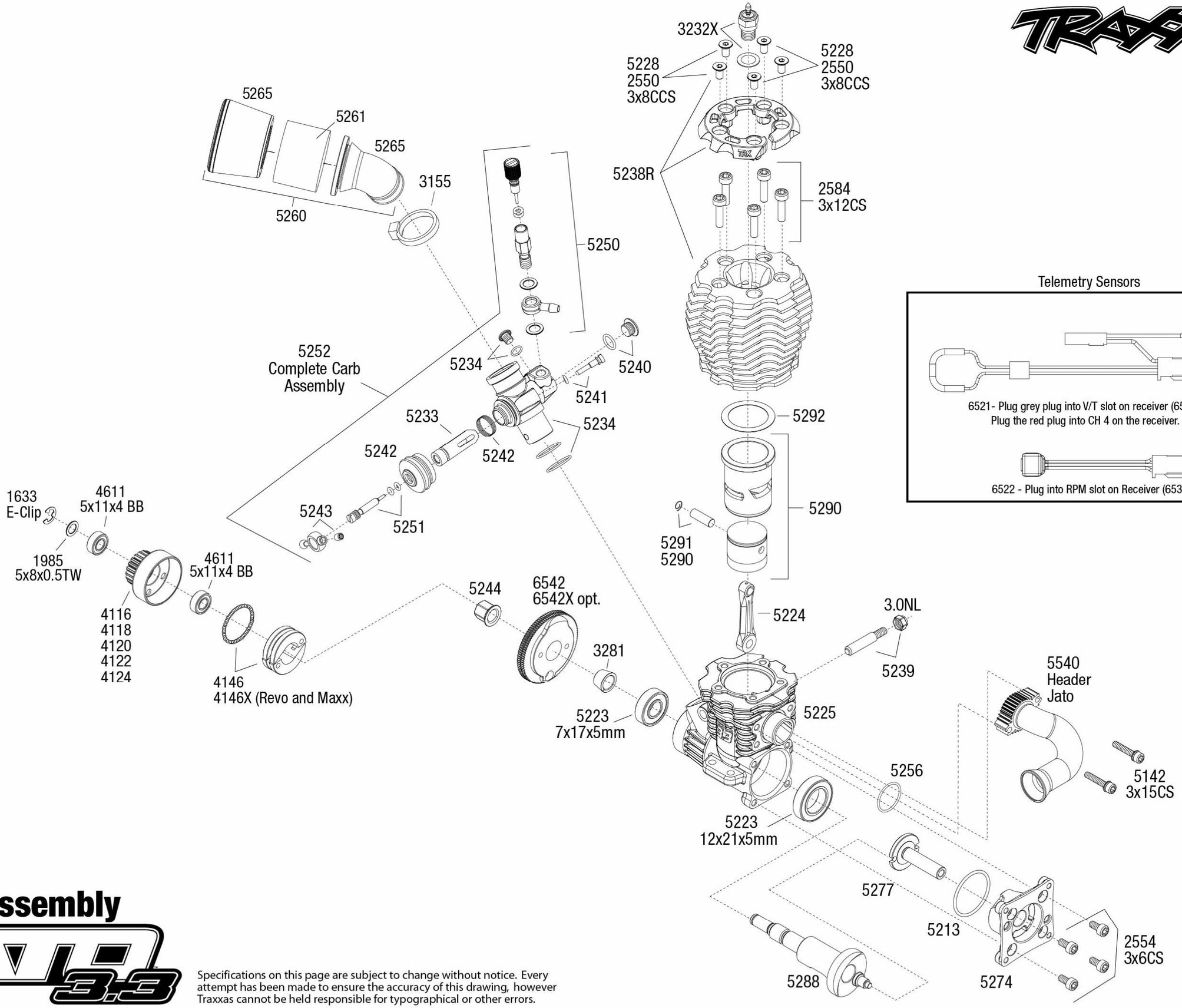

Telemetry Sensors

6521- Plug grey plug into V/T slot on receiver (6533).
Plug the red plug into CH 4 on the receiver.

6522 - Plug into RPM slot on Receiver (6533)

Engine Assembly

JATO 3.3

Specifications on this page are subject to change without notice. Every attempt has been made to ensure the accuracy of this drawing, however Traxxas cannot be held responsible for typographical or other errors.

REV 190329-R03

JATO 3.3

Front Assembly

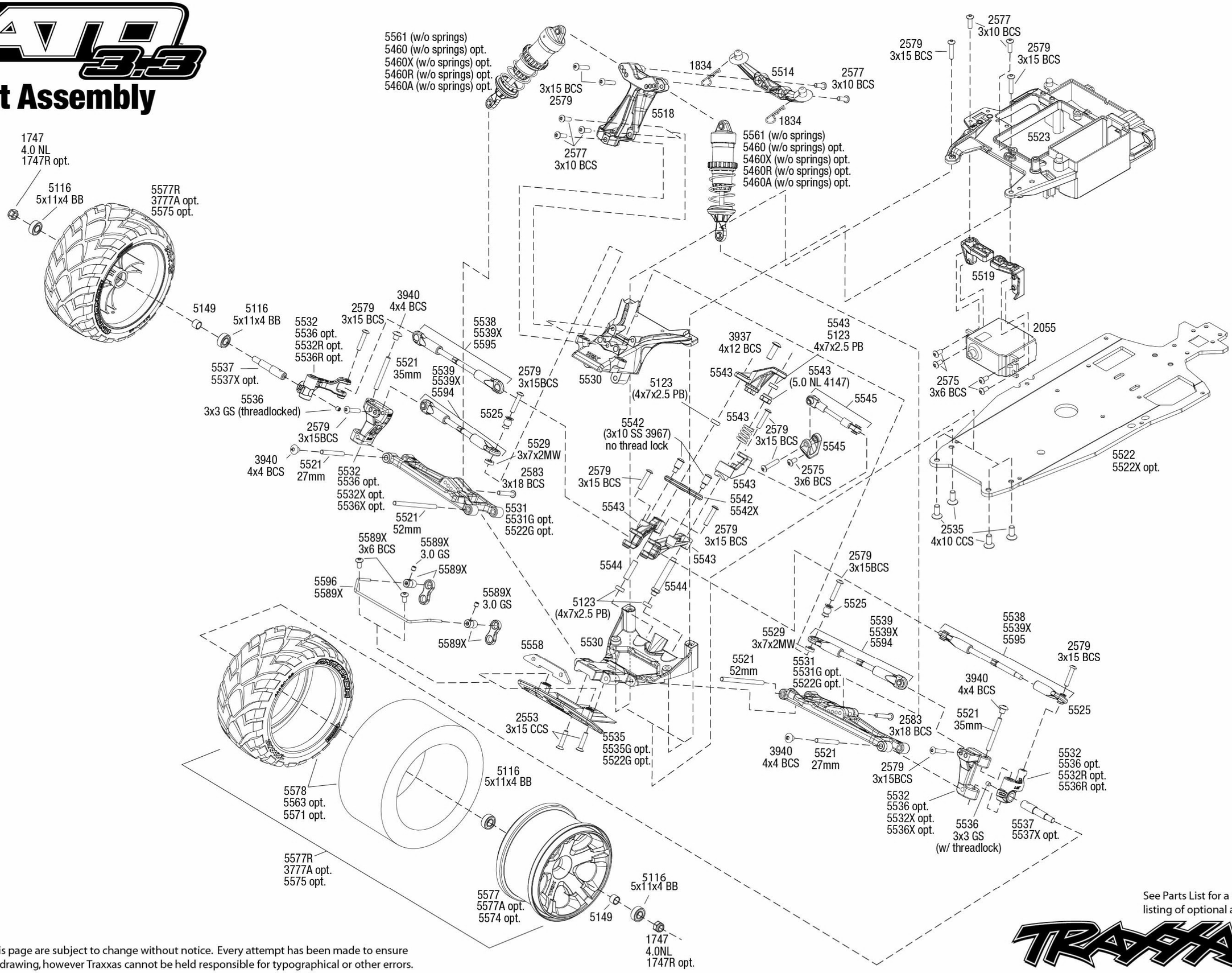

See Parts List for a complete listing of optional accessories.

REV 190329-R03

Specifications on this page are subject to change without notice. Every attempt has been made to ensure the accuracy of this drawing, however Traxxas cannot be held responsible for typographical or other errors.

Rear Assembly

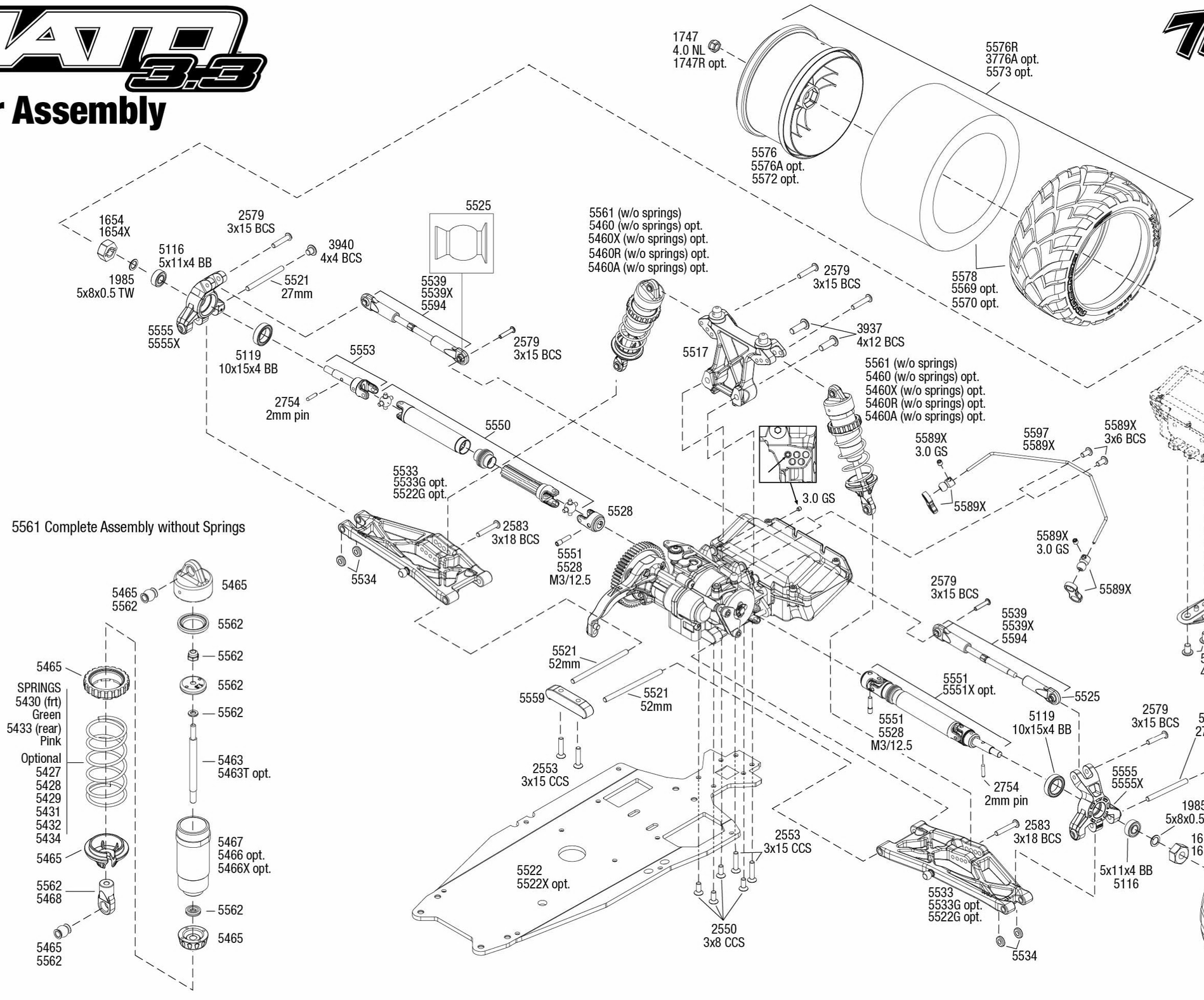

5561 Complete Assembly without Springs

See Parts List for a complete listing of optional accessories.

REV 190329-R03

Specifications on this page are subject to change without notice. Every attempt has been made to ensure the accuracy of this drawing, however Traxxas cannot be held responsible for typographical or other errors.

Transmission Assembly

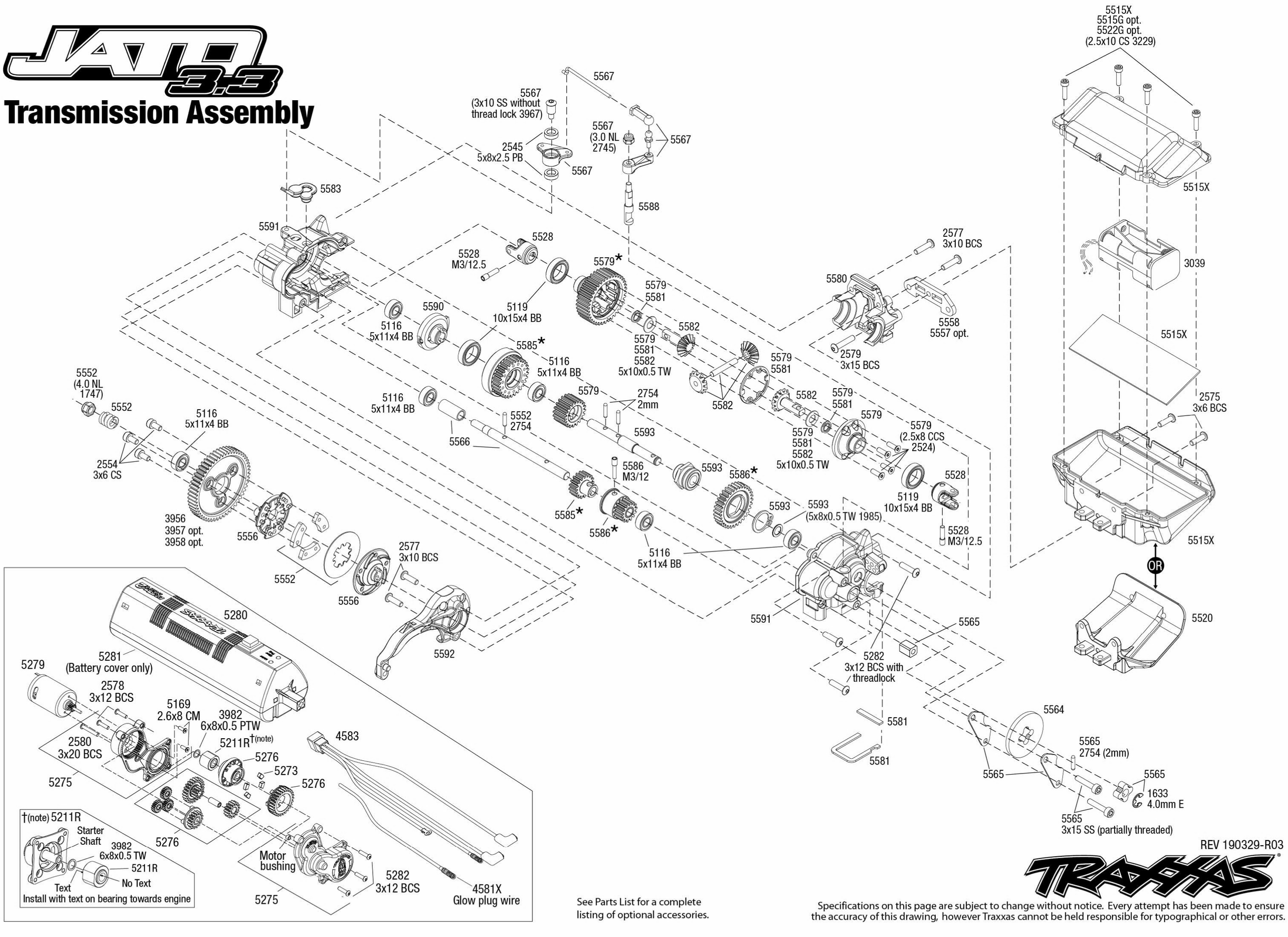

See Parts List for a complete listing of optional accessories.

REV 190329-R03

Specifications on this page are subject to change without notice. Every attempt has been made to ensure the accuracy of this drawing, however Traxxas cannot be held responsible for typographical or other errors.

TRAXXAS Vehicle Steering Servo Upgrade Chart

Traxxas Vehicle	Traxxas Std Steering Servo	Traxxas Metal Gear Conversion	Traxxas Option Servo #1	Traxxas Option Servo #2	Savöx Option Servo #1	Savöx Option Servo #2	Notes
Bandit XL5	2056 (5.76kg/cm - 0.23s) PG	–	**2075X** (9kg/cm - 0.17s) MG	**2250** (23.8kg/cm - 0.19s) MG	**SAV-SW0230MG** (6.5kg/cm - 0.16s) MG	**SAV-SW0231MG** (15kg/cm - 0.17s) MG	
Bandit VXL	2075 (9kg/cm - 0.17s) PG	2072X	**2075X** (9kg/cm - 0.17s) MG	**2250** (23.8kg/cm - 0.19s) MG	**SAV-SW0231MG** (15kg/cm - 0.17s) MG	**SAV-SW1210SG** (20kg/cm - 0.15s) SG	
Rustler XL5	2056 (5.76kg/cm - 0.23s) PG	–	**2075X** (9kg/cm - 0.17s) MG	**2250** (23.8kg/cm - 0.19s) MG	**SAV-SW0230MG** (6.5kg/cm - 0.16s) MG	**SAV-SW0231MG** (15kg/cm - 0.17s) MG	
Rustler VXL	2075 (9kg/cm - 0.17s) PG	2072X	**2075X** (9kg/cm - 0.17s) MG	**2250** (23.8kg/cm - 0.19s) MG	**SAV-SW0231MG** (15kg/cm - 0.17s) MG	**SAV-SW1210SG** (20kg/cm - 0.15s) SG	
Stampede XL5 (+Bigfoot)	2056 (5.76kg/cm - 0.23s) PG	–	**2075X** (9kg/cm - 0.17s) MG	**2250** (23.8kg/cm - 0.19s) MG	**SAV-SW0230MG** (6.5kg/cm - 0.16s) MG	**SAV-SW0231MG** (15kg/cm - 0.17s) MG	
Stampede VXL	2075 (9kg/cm - 0.17s) PG	2072X	**2075X** (9kg/cm - 0.17s) MG	**2250** (23.8kg/cm - 0.19s) MG	**SAV-SW0231MG** (15kg/cm - 0.17s) MG	**SAV-SW1210SG** (20kg/cm - 0.15s) SG	
Slash XL5 (+ Ford Raptor)	2075 (9kg/cm - 0.17s) PG	2072X	**2075X** (9kg/cm - 0.17s) MG	**2250** (23.8kg/cm - 0.19s) MG	**SAV-SW0231MG** (15kg/cm - 0.17s) MG	**SAV-SW1210SG** (20kg/cm - 0.15s) SG	
Slash VXL	2075 (9kg/cm - 0.17s) PG	2072X	**2075X** (9kg/cm - 0.17s) MG	**2250** (23.8kg/cm - 0.19s) MG	**SAV-SW0231MG** (15kg/cm - 0.17s) MG	**SAV-SW1210SG** (20kg/cm - 0.15s) SG	
Drag Slash VXL	2075 (9kg/cm - 0.17s) PG	2072X	**2075X** (9kg/cm - 0.17s) MG	**2250** (23.8kg/cm - 0.19s) MG	**SAV-SW0231MG** (15kg/cm - 0.17s) MG	**SAV-SW1210SG** (20kg/cm - 0.15s) SG	
Rustler 4x4 XL5	2056 (5.76kg/cm - 0.23s) PG	–	**2075X** (9kg/cm - 0.17s) MG	**2250** (23.8kg/cm - 0.19s) MG	**SAV-SW0230MG** (6.5kg/cm - 0.16s) MG	**SAV-SW0231MG** (15kg/cm - 0.17s) MG	
Rustler 4x4 VXL	2075 (9kg/cm - 0.17s) PG	2072X	**2075X** (9kg/cm - 0.17s) MG	**2255** (28.8kg/cm - 0.15s) MG	**SAV-SW0231MG** (15kg/cm - 0.17s) MG	**SAV-SW1210SG** (20kg/cm - 0.15s) SG	
Stampede 4x4 XL5	2056 (5.76kg/cm - 0.23s) PG	–	**2075X** (9kg/cm - 0.17s) MG	**2250** (23.8kg/cm - 0.19s) MG	**SAV-SW0230MG** (6.5kg/cm - 0.16s) MG	**SAV-SW0231MG** (15kg/cm - 0.17s) MG	
Stampede 4x4 VXL	2075 (9kg/cm - 0.17s) PG	2072X	**2075X** (9kg/cm - 0.17s) MG	**2255** (28.8kg/cm - 0.15s) MG	**SAV-SW0231MG** (15kg/cm - 0.17s) MG	**SAV-SW1210SG** (20kg/cm - 0.15s) SG	
Hoss 4x4 VXL	2075 (9kg/cm - 0.17s) PG	2072X	**2250** (23.8kg/cm - 0.19s) MG	**2255** (28.8kg/cm - 0.15s) MG	**SAV-SW1210SG** (20kg/cm - 0.15s) SG	**SAV-SA1230SG** (36kg/cm - 0.16s) SG	
Maxx 4x4 VXL	2090 (no specs available) PG	–	**2085X** (26.3kg/cm - 0.17s) MG*	**2255** (28.8kg/cm - 0.15s) MG*	**SAV-SW1210SG** (20kg/cm - 0.15s) SG*	**SAV-SA1230SG** (36kg/cm - 0.16s) SG*	*Use with: Traxxas 7749 Servo Holder
Slash 4x4 XL5 (+ Rally XL5)	2056 (5.76kg/cm - 0.23s) PG	–	**2075X** (9kg/cm - 0.17s) MG	**2255** (28.8kg/cm - 0.15s) MG	**SAV-SW0230MG** (6.5kg/cm - 0.16s) MG	**SAV-SW0231MG** (15kg/cm - 0.17s) MG	
Slash 4x4 VXL	2075 (9kg/cm - 0.17s) PG	2072X	**2075X** (9kg/cm - 0.17s) MG	**2250** (23.8kg/cm - 0.19s) MG	**SAV-SW0231MG** (15kg/cm - 0.17s) MG	**SAV-SW1210SG** (20kg/cm - 0.15s) SG	
Slash 4x4 Ultimate	2075R (High-speed) MG	–	**2250** (23.8kg/cm - 0.19s) MG	**2255** 28.8kg/cm - 0.15s) MG	**SAV-SW0231MG** (15kg/cm - 0.17s) MG	**SAV-SW1210SG** (20kg/cm - 0.15s) SG	
Summit 1/10	2075 (9kg/cm - 0.17s) PG (2)	2072X	**2250** (23.8kg/cm - 0.19s) MG*	**2255** 28.8kg/cm - 0.15s) MG*	**SAV-SW0231MG** (15kg/cm - 0.17s) MG	**SAV-SW1210SG** (20kg/cm - 0.15s) SG*	*Only one servo is needed
TRX-4	2075X (9kg/cm - 0.17s) MG	–	**2255** (28.8kg/cm - 0.15s) MG, 2-3s LiPo*	**2250** (23.8kg/cm - 0.19s) MG, Up to 2s LiPo*	**SAV-SW0231MG** (15kg/cm - 0.17s) MG*	**SAV-SW1210SG** (20kg/cm - 0.15s) SG*	*Use with Traxxas 2262 HD BEC
TRX-4 with TRAXX	2075X (9kg/cm - 0.17s) MG	–	**2255** (28.8kg/cm - 0.15s) MG, 2-3s LiPo*	**2250** (23.8kg/cm - 0.19s) MG, Up to 2s LiPo*	**SAV-SW1210SG** (20kg/cm - 0.15s) SG*	**SAV-SA1230SG** (36kg/cm - 0.16s) SG*	*Use with Traxxas 2262 HD BEC
TRX-6	2075X (9kg/cm - 0.17s) MG	–	**2255** (28.8kg/cm - 0.15s) MG, 2-3s LiPo*	**2250** (23.8kg/cm - 0.19s) MG, Up to 2s LiPo*	**SAV-SW0231MG** (15kg/cm - 0.17s) MG*	**SAV-SW1210SG** (20kg/cm - 0.15s) SG*	*Use with Traxxas 2262 HD BEC
UDR	2075R (High-speed) MG	–	**2250** (23.8kg/cm - 0.19s) MG	**2255** (28.8kg/cm - 0.15s) MG	**SAV-SW1210SG** (20kg/cm - 0.15s) SG	**SAV-SA1230SG** (36kg/cm - 0.16s) SG	
E-Revo VXL	2075 (9kg/cm - 0.17s) PG (2)	2072X	**2075X** (9kg/cm - 0.17s) MG	**2255** (28.8kg/cm - 0.15s) MG*	**SAV-SW0231MG** (15kg/cm - 0.17s) MG	**SAV-SA1230SG** (36kg/cm - 0.16s) SG*	*Only one servo is needed
X-Maxx 8s	2085 (26.3kg/cm - 0.17s) PG	2087X	**2085X** (26.3kg/cm - 0.17s) MG*	**2255** (28.8kg/cm - 0.15s) MG*	**SAV-SA1230SG** (36kg/cm - 0.16s) SG*	**SAV-SB2290SG** (40kg/cm - 0.16s) SG*	*Use with: Traxxas 7749 Servo Holder
4-TEC 2.0/3.0	2075 (9kg/cm - 0.17s) PG	2072X	**2075X** (9kg/cm - 0.17s) MG	**2250** (23.8kg/cm - 0.19s) MG	**SAV-SW0231MG** (15kg/cm - 0.17s) MG	**SAV-SW1210SG** (20kg/cm - 0.15s) SG	
XO-1	2075 (9kg/cm - 0.17s) PG	2072X	**2075X** (9kg/cm - 0.17s) MG	**2255** (28.8kg/cm - 0.15s) MG	**SAV-SW0231MG** (15kg/cm - 0.17s) MG	**SAV-SW1210SG** (20kg/cm - 0.15s) SG	
Nitro Slash (+ Nitro Rustler)	2055 (9kg/cm - 0.20s) PG	–	**2075X** (9kg/cm - 0.17s) MG	**2250** (23.8kg/cm - 0.19s) MG*	**SAV-SW0230MG** (6.5kg/cm - 0.16s) MG*	**SAV-SW0231MG** (15kg/cm - 0.17s) MG*	*Use with 5-cell NiMH Receiver Battery
Slayer Pro 4x4	2075 (9kg/cm - 0.17s) PG	2072X	**2075X** (9kg/cm - 0.17s) MG	**2255** (28.8kg/cm - 0.15s) MG*	**SAV-SW0231MG** (15kg/cm - 0.17s) MG*	**SAV-SW1210SG** (20kg/cm - 0.15s) SG*	*Use with 5-cell NiMH Receiver Battery
Jato 3.3	2055 (9kg/cm - 0.20s) PG	–	**2075X** (9kg/cm - 0.17s) MG	**2250** (23.8kg/cm - 0.19s) MG*	**SAV-SW0231MG** (15kg/cm - 0.17s) MG*	**SAV-SW1210SG** (20kg/cm - 0.15s) SG*	*Use with 5-cell NiMH Receiver Battery
T-Maxx 3.3	2070 (9kg/cm - 0.17s) PG	2072X	**2075X** (9kg/cm - 0.17s) MG	**2250** (23.8kg/cm - 0.19s) MG*	**SAV-SW0231MG** (15kg/cm - 0.17s) MG*	**SAV-SW1210SG** (20kg/cm - 0.15s) SG*	*Use with 5-cell NiMH Receiver Battery
Revo 3.3	2075 (9kg/cm - 0.17s) PG (2)	2072X	**2075X** (9kg/cm - 0.17s) MG	**2250** (23.8kg/cm - 0.19s) MG*	**SAV-SW0231MG** (15kg/cm - 0.17s) MG*	**SAV-SW1210SG** (20kg/cm - 0.15s) SG*	*Use with 5-cell NiMH Receiver Battery
1/16 Slash 4x4	2080 (3kg/cm - 0.11s) PG	–	**2080X** (3kg/cm - 0.11s) MG	–	**SAV-SW0250MG** (5kg/cm - 0.11s) MG	–	
1/16 E-Revo 4x4 XL3/VXL	2080 (3kg/cm - 0.11s) PG	–	**2080X** (3kg/cm - 0.11s) MG	–	**SAV-SW0250MG** (5kg/cm - 0.11s) MG	–	
1/16 Summit	2080 (3kg/cm - 0.11s) PG	–	**2080X** (3kg/cm - 0.11s) MG	–	**SAV-SW0250MG** (5kg/cm - 0.11s) MG	–	
1/18 Teton (LaTrax)	2065 (2.3kg/cm - 0.20s) PG	–	**2065X** (2.3kg/cm - 0.20s) MG	–	–	–	
1/18 Rally (LaTrax)	2065 (2.3kg/cm - 0.20s) PG	–	**2065X** (2.3kg/cm - 0.20s) MG	–	–	–	
1/18 Prerunner/SST (LaTrax)	2065 (2.3kg/cm - 0.20s) PG	–	**2065X** (2.3kg/cm - 0.20s) MG	–	–	–	

Distributed by: Minicars Hobby Distribution AB | Annelundsgatan 17C | 749 40 Enköping | Sweden | B2B: www.minicars.se | e-mail: info@minicars.se | Phone: +46-171-143000
Version: 2021-05-31

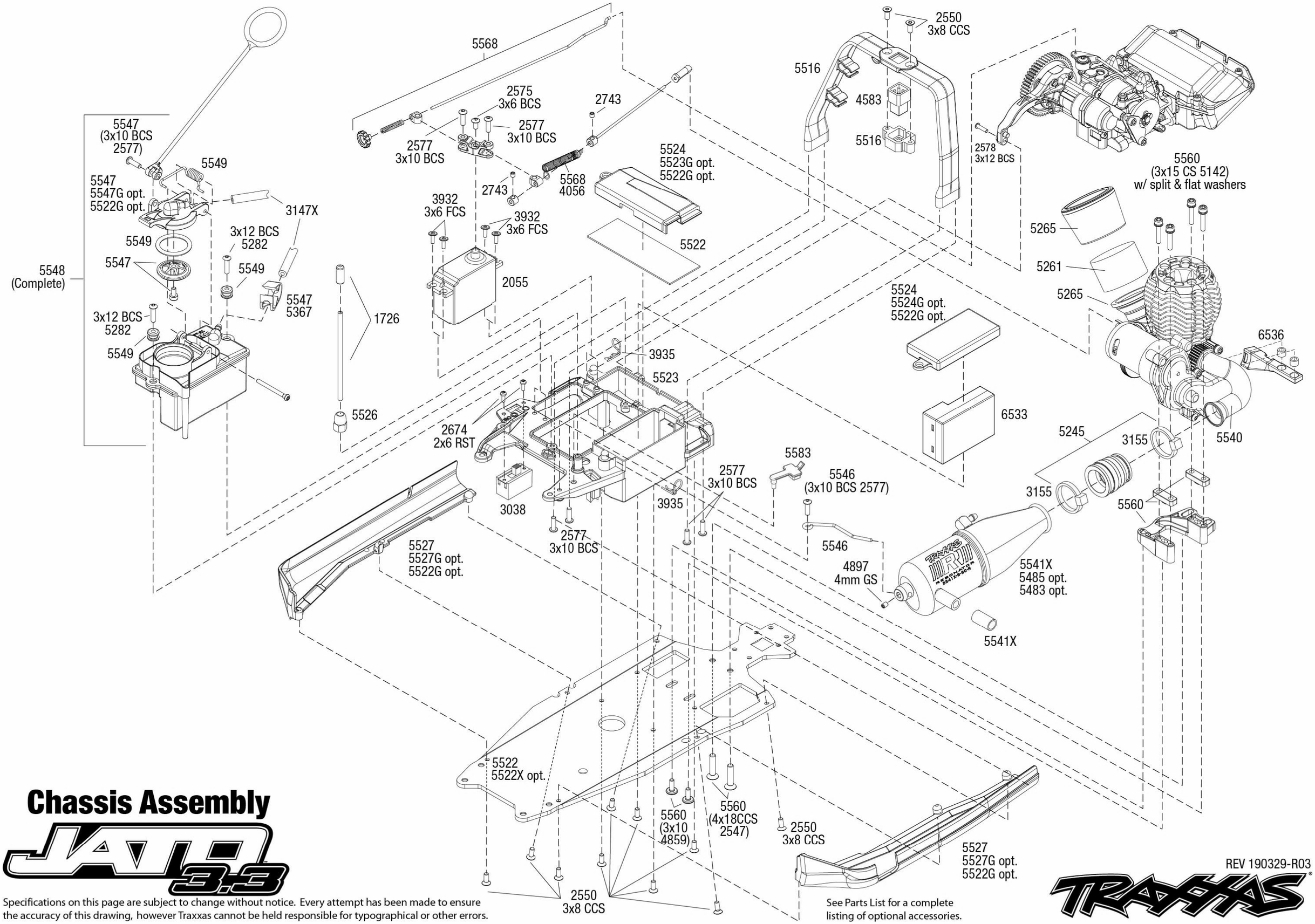

Chassis Assembly

JATO 3.3

Specifications on this page are subject to change without notice. Every attempt has been made to ensure the accuracy of this drawing, however Traxxas cannot be held responsible for typographical or other errors.

See Parts List for a complete listing of optional accessories.

REV 190329-R03

TRAXXAS